Design and Development of the social Humanoid Robot named Ribo

1st Noushad Sojib
Dept.of CSE, Shahjalal University of Science & Technology
noushad.sust@gmail.com

2nd Saiful Islam
Dept.of EEE, Shahjalal University of Science & Technology
m.saiful.i.d@gmail.com

3rd Mehedi Hasan Rupok
Dept.of Arc, Shahjalal University of Science & Technology
mehedihassanrupok@gmail.com

4th Sajid Hasan
Dept.of EEE, Shahjalal University of Science & Technology
sjsajidhasan@gmail.com

5th Md. Ruhul Amin
Dept.of CSE, Shahjalal University of Science & Technology
shajib.sust@gmail.com

6th M. Zafar Iqbal
Dept.of CSE, Shahjalal University of Science & Technology
mzi@sust.edu

***Abstract*—This paper is about the design and development of "Ribo", the upper torso enabled social humanoid robot and the mass people's response to it as received at several public exhibition. Ribo is 135cm tall and has necessary actuation in the face to show basic facial expression. The exterior design is especially crafted to make it look more like a social artificial being rather than just a mechanical robot. The robot is optimized by a distributed software architecture which enables modules developed in different programming languages to work in sync. Ribo was presented in several exhibitions in Bangladesh where mass people directly interacted with it. During that time the visitors were asked several questions on the robot's design to rate the social behavior of Ribo. According to the survey, people liked Ribo mostly because of its facial design and how it speaks in their mother tongue.**

***Index Terms*—Social Humanoid Robot, Exterior Design, Social Features, Personal Robot.**

I. Introduction

It is not hard to imagine that within the next few decades, humanoid robots are going to live amongst us in the human environment and assist us with a better living. In order to become actual helping hands instead of just tools or machines, robots too require social appearances like people. Keeping that in mind, we have developed an upper body movement enabled humanoid robot and let it interact with people to know what kinds of behavior do they expect from a humanoid day-to-day assistant.

Most of the robots lack facial expressions, and when they speak it sounds like they're not speaking or interacting but some sound is coming out of a speaker. But to make Ribo look and sound more human-like, we added some animatronic behavior in its face so that people feel the robot itself is actually speaking to them and answering when spoken to [8]. Since people feel more comfortable speaking face to face and often keeping eye contact, we have added sound source localization to this robot and hence it turns to face the caller before speaking or responding. To make Ribo's face look more like an actual face, we have included total 8 movements (8 DOF) in the facial area. Hence, it can blink eyes, raise eyebrows, look straight to the user by facing them, etc. Fig. 1 describes the physical structure and position of various hardware components of the robot.

Bangladesh Science-Fiction Society sponsored the development cost of this robot

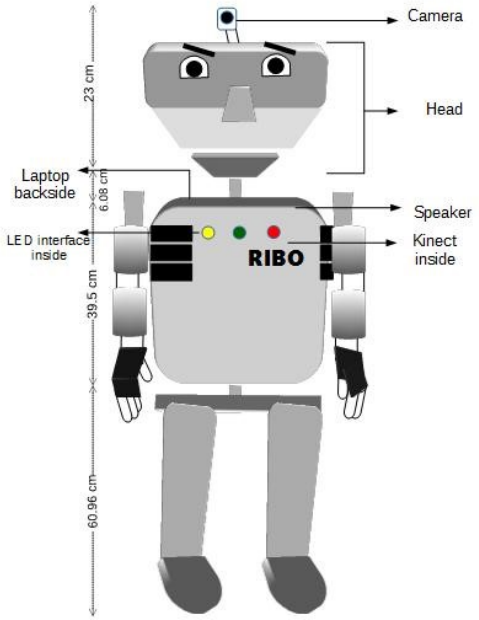

Fig. 1: The robot structure

II. Literature Review

Research has shown that people subconsciously treat computers as social peers [3]. Breazeal offered a set of design issues for social intelligence and implemented in the robot named Kismet [1]. It is expected that robots will be considered

as another peer or as a partner instead of tools or toys [2]. So What features are required for a robot to be social? As the term ”social” belongs to human colony, the answer can be found by studying how people act social role in their world [4] [5]. The concept of ”humanoid structure” refers to the outlook of a robot to make it social in the human environment [6] [7].Asimo is the most popular of all humanoid kind robot but don't have any expressive face [11].

III. Design & Development

A. Mechanical Design

Inspired by the human model we have implemented generic human structure in this robot. To make it feel more social we did some extra concern in designing parts especially in the face and thats how it becomes different from other humanoid robots [9]. We followed a hypothesis that robots must not be the human competitor but some artificial being.That's why we have put artificial like exterior instead of human-like skinny design.The Table I shows the specification.

TABLE I: Specification

Name	Info
Height	129.54 cm
Weight	12 Kg
DOF	• Face: 8 • Arm: 7 X 2 =14 • Torso: 2 Total = 24
Processor	• Intel Core 2 Due • Arduino Mega
Sensor	• Motion Sensor • RGB Camera • Microphone Array • Touch

1) Face Design: The face tells many things when it comes to the human world. This was the most important part carefully we have designed.The Fig. 2 shows the dimension and motions in the face. The face consists of two eyes, two eyelids, two eyebrows. There are two motions; looking left and right for each eye, eyelids can move up-down, eyebrows each can rotate and go up-down also. The jaws move up-down hence it shows mouth open-close motion. There are total 8 motors responsible for these motions.

To make the eye look realistic we put cameras inside the eyeball and it makes feel the depth of the eyes. The eyelids help the robot to blink like living human. The eyebrows help it to display facial expression. We have used suitable color for all the facial components to make it look realistic. The Table II shows dimension in face.

TABLE II: Dimension in face

Name	Length
Eye Distance	6.5cm
Face Length (Vertical)	162 cm
Face Width	14.5 cm
Face depth	15 cm

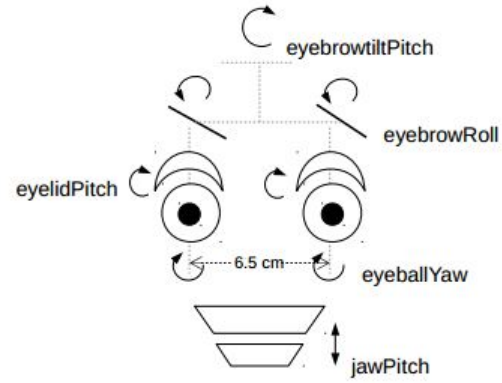

Fig. 2: All 8 movements (8 DOF) in the face

2) Arm Design: There are total 7 DOF in each arm. The Table III shows dimensions in arm.

TABLE III: Dimension in Arm

Name	Length (cm)
HandOffset	15
UpperArmLength	17
LowerArmLength	13.5
ShoulderOffset	32.1

3) Torso and lower body: Total two DOF here. There is a joint in the neck that enables the robot to rotate the face left and right. The waist joint enables it to rotate the whole upper body left and right.

4) Forward and Inverse Kinematics: Forward and inverse kinematics gives position information about the end effector and is necessary to move arms in task space.

B. Electrical Architecture

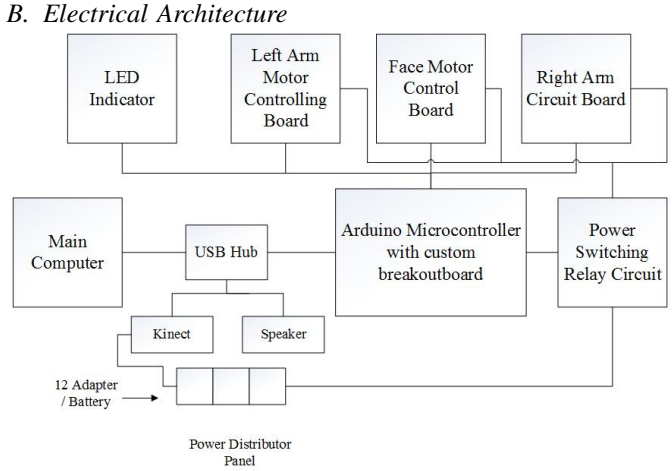

Fig. 3: Block diagram of Ribo circuit.

1) Circuit design & Electronics: The electronic section contains all the necessary circuits to make the actuator, sensors active. The circuits were designed to provide powers, send control signals to the servo motors and read data from the sensors. A core 2 due laptop work as the main computer and an Arduino mega board work as the secondary processor to control all the low label hardware. The secondary processor communicates with the main computer using Serial Protocol with a baud rate of 115200. The overall circuit system depicted

in the Fig. 3
The system consists of the following parts-

- ***Central control board:*** We have developed a custom breakout board which sits on Arduino Mega board.The beneath Arduino Mega board has a 16 bit 16MHZ ATmega2560 microcontroller with 8KB of RAM and 32KB ROM. All the sub-circuits are connected here for controlling purpose.
- ***Power distributor panel:***Its provide necessary regulated voltage to 5V, 6V, 12V labeled ports.
- ***Power switching board:***All the end controller board get power through this circuit. Hence, they can be switched on and off from this board by a controlling signal from the Arduino.
- ***Left Arm Control Board:***Connect all the 7 motors, power up them and provide bus connection to the main control board.
- ***Right Arm Control Board:***Connect all the 7 motors, power up them and provide bus connection to the main control board. Also, it connects the touch sensor provide control connection using the bus to the main control board.
- ***Face Control Board:***Connect all the 8 motors, power up them and provide bus connection to the main control board.
- ***LED Indicator:***Total 4 LED in Blue, Yellow, Red and Green color to show robot status.
- ***USB Hub:***It directly connects the output device speaker, Kinect sensor, camera and the secondary processor to the main computer.

2) Sensors: Ribo is equipped with a camera, a motion sensor Kinect which has microphone array with an RGB and depth camera also. Here the microphone array of the Kinect device was used as the sound source for 3D sound localization. There is a touch sensor in the right hand that allows it to understand if someone has grabbed its hand.
The camera and the Kinect are connected to the USB hub and additional power adapter of the Kinect is connected to the power distribution board.

C. Software Architecture

1) Ribo Framework: There are many layers of control and driving routine for such a big system and it's often practical to write different software in the different language. Keeping this in consideration and to keep the design modular we have built an easy to use distributed architecture inspired by the Robot Operating System (ROS) [12].The Fig. 4 depicts the main software architecture.
This framework provides a way to write an independent program for each task without worrying how it will be used with other systems. Every program is considered as a node and it can publish its result for other nodes and can get data from other nodes through a central program called Ribo-Core. Here socket is used for the process to process communication and we have developed a protocol and published API for Java, Python, and C#.
The framework composed of following

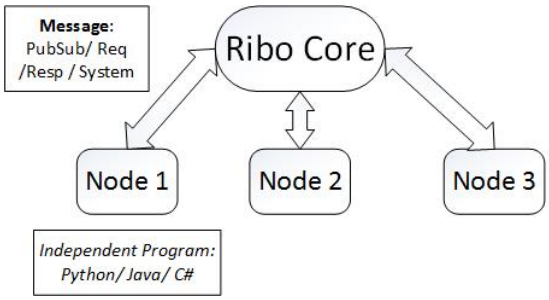

Fig. 4: System Architecture

- ***Ribo Core:*** This serves as the main program for the framework and it allows programs to communicate with others.This works as manager for all programs and deliver messages to proper candidates.
- ***Node:*** Each program is considered as an independent node. They can connect at runtime to the core software to send and get a message from other nodes. Nodes can be written in any of the 3 languages. Nodes can register multiple topics to the Ribo Core.
- ***Topic:*** Every message belongs to some program defined topic. Programs with the same topic will get the same message.
- ***Message:*** The message is a single line string text. It must be encoded /decoded before sending and after receiving.It consists of followings.
  - Type: There are 3 types of the message header. "pubsub", "req" and "resp". "pubsub" indicates the message will be published to all the listener nodes."req" indicates the message contains a request in the payload. And "resp" indicates the message is a service response and data is in the payload. All the registered listener on the topic will get this message.
  - Separator: Predefined string to separate different parts of the message.
  - Payload: This is the actual data.Sender and receiver must need to know what data is in it and how to interpret it.

2) Software System of Ribo: This part describes the software responsible for the robot to run. All these programs run on top of Ribo Framework.

- ***Low Label Motor, Sensor and IO control Node:*** This Node is written in Arduino and run on an Arduino mega attached to the onboard computer using USB.
- ***Hardware Control:*** This node was written in Java. It directly communicates with the Arduino node and registers with "hwdata" topics to the Ribo Core for position and IO control by other nodes.
- ***Sensor Nodes:*** Face, Emotion detection and Speech nodes fall in this type. Each node handles the load and open "pubsub" and request-response interface to the Ribo Core for processing the data by other nodes.
- ***Ribo Robot Node:*** This is the main control node for the robot. It commands hardware nodes to configure all the motors and IO, and also subscribe to all the sensor nodes for data. This node contains the full robot kinematic

description also. There are several animation routines for facial expression, handshake, dance etc. It uses State Machine as AI system to process sensor data and behave accordingly.

- ***Sound Source Localization:***The microphone array in Kinect sensor is used here to localize the sound source. It enables the robot to detect caller location and look towards the direction.
- ***Voice Recognition:***The Java version of Microsoft Speech API is used here to detect voice command both in Bengali and English. We have trained 20 basic commands like 'What is your name', 'Can u dance', 'Do handshake', ... etc. The robot can perform dance, handshake, hands-up, down, salute, hand-wave etc action besides some facial expression using face components.
- ***Animatronic behavior:*** We have created some animatronic behavior like dance, handshake, salute, hands-up, hands-down, eyebrow up-down-tilt, eyes open-close-wink, jaw up-down etc. Combination of all these can show complex behavior also.

IV. Experiment

Since it is a social humanoid robot, we let Ribo interact with people. We stationed the robot in the home environment as well as noisy places like a public exhibition. In all these states it was able to recognize the trained questions and performed proper actions accordingly. During the exhibition, it was powered by main power supply and the system ran continuously without any major problem. It was exhibited in one 7 day, one 3 day and three 1 day public exhibitions where thousands of people including kids spoke and interacted with it.

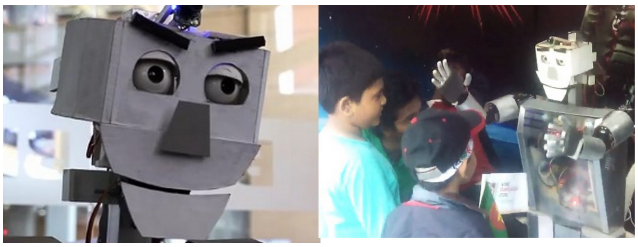

Fig. 5: Experiment with Ribo

V. Results

Thousands of people interacted with the robot and people were amazed as well as amused to see an artificial machine speak and act in such a human-like manner. A survey was made based on the people who attended the exhibition about how they accepted Ribo. Total 202 people have participated in it. Fig. 6 shows some response from the survey. 62.6% people rated the behavior of this robot as social, 69.8% people said some mistakes by this robots were acceptable, 64.6% people showed interest to get this robot home where 80.7% people agreed that such robots are capable of working in home and office environments.

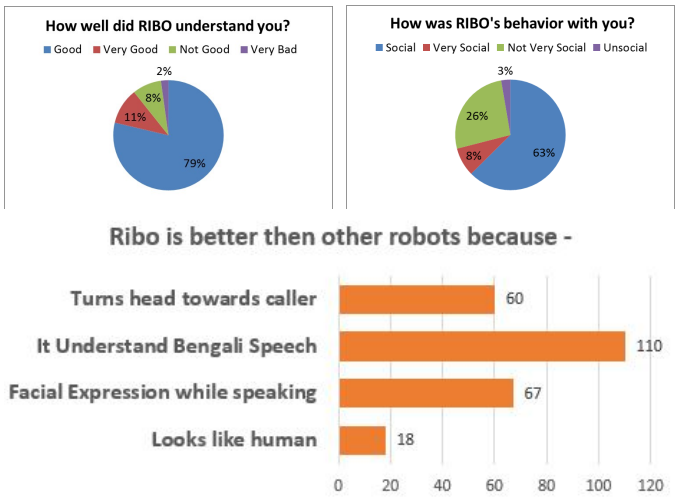

Fig. 6: Survey results

VI. Conclusion

This paper describes an insubstantial humanoid named Ribo developed by a student team of Bangladesh who are highly passionate robotic enthusiasts to bring robots in daily work environment.

Hence its social engagements were highly emphasized while designing its look and AI programs.According to the survey results, it is clear that people like the robot especially because of its facial expressions and its ability to speak and respond in Bengali.

Acknowledgements

We would like to thanks Bangladesh Science Fiction Society (BSFS) for funding this project. We also like to thanks Nusrat Mubin Ara, Khirul Alam, Taufiq Rahman, Farhanul Islam, Shakhwat Hossain Prayash, Ragib Shaharear, Umme Sumaya Jannat, Fahima Chowdhury, Jahid Chowdhury Choton and Shuhan Mirza for their effort on developing this robot.

References

[1] Breazeal, Cynthia L. Designing sociable robots. MIT press, 2004.
[2] Jeong, Sooyeon, et al. "Designing a socially assistive robot for pediatric care." Proceedings of the 14th international conference on interaction design and children. ACM, 2015.
[3] Burgoon, Judee K., et al. "Interactivity in humancomputer interaction: A study of credibility, understanding, and influence." Computers in human behavior 16.6 (2000): 553-574.
[4] Breazeal, Cynthia. "Social interactions in HRI: the robot view." IEEE Transactions on Systems, Man, and Cybernetics, Part C (Applications and Reviews) 34.2 (2004): 181-186.
[5] Breazeal, Cynthia. "Emotion and sociable humanoid robots." International Journal of Human-Computer Studies 59.1 (2003): 119-155.
[6] Kidd, Cory David. Sociable robots: The role of presence and task in human-robot interaction. Diss. Massachusetts Institute of Technology, 2003.
[7] Breazeal, Cynthia. "Toward sociable robots." Robotics and autonomous systems 42.3 (2003): 167-175.
[8] "About", Hoques.com, 2017. [Online]. Available: http://hoques.com/DisnayAnimatronics.htm. [Accessed: 14- Nov-2017].
[9] Gouaillier, David, et al. "The nao humanoid: a combination of performance and affordability." CoRR abs/0807.3223 (2008).
[10] Siciliano, Bruno, et al. Kinematics. Springer London, 2009.
[11] Hirose, Masato. "Development of humanoid robot ASIMO." Proc. IEEE/RSJ Int. Conference on Intelligent Robots and Systems (Oct. 29, 2001). 2001.
[12] Quigley, Morgan, et al. "ROS: an open-source Robot Operating System." ICRA workshop on open source software. Vol. 3. No. 3.2. 2009.